# Drawing

| Product Type Connector | AC-MMCX-M -174（178） |
|---|---|

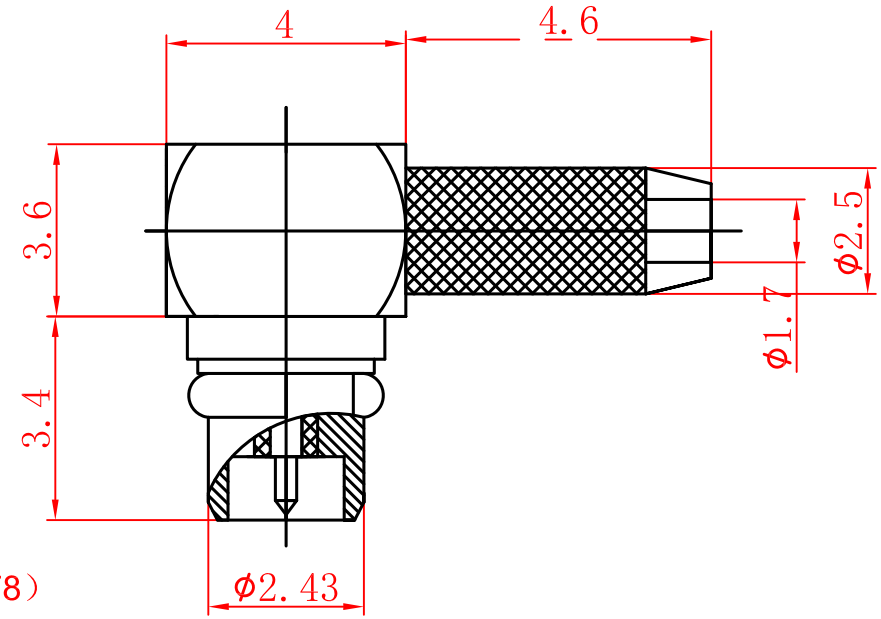


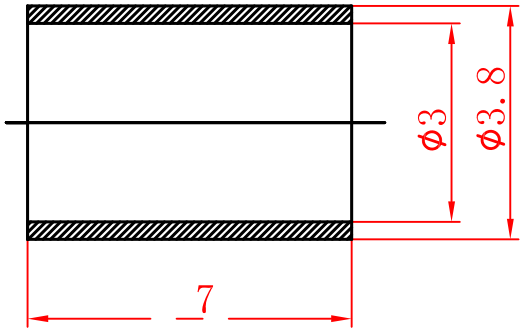


AC-MMCX-M-174（178）

1.Material:Brass.
2.Finish:Gold.
3.Impedance:50ohm.
4.Terperature range: -55～+155℃°
5.Fre:0-3G.
6.Weight:5g.
7. VSWR : ≤1.15
8. Durability(mating) : ≥500(cycles)

Techology：RoHs

ASIAN CREATION COMMUNICATION CO.,LTD
www.acantenna.com

| NO. | PARTNAME | DESCRIPTION | | | | | | | | |
|---|---|---|---|---|---|---|---|---|---|---|
| 3 | | | | | | | | | | |
| 2 | | | STANDARD | P/No: | AC-MMCX-MJW-174 | | Qty | 1PCS | DR. | YJP |
| 1 | | | | SPEC | | | Wet | 3g | VENDER | VIVIS |
| | | | MATERIAL | DWG NO. | 2011AC-MMCX-MJW-174 | | REV | A | CHKD | BEN |
| | | | | SHEET | 1/1 | UNIT MM | 投影法 | | DAY | 2022-9-30 |